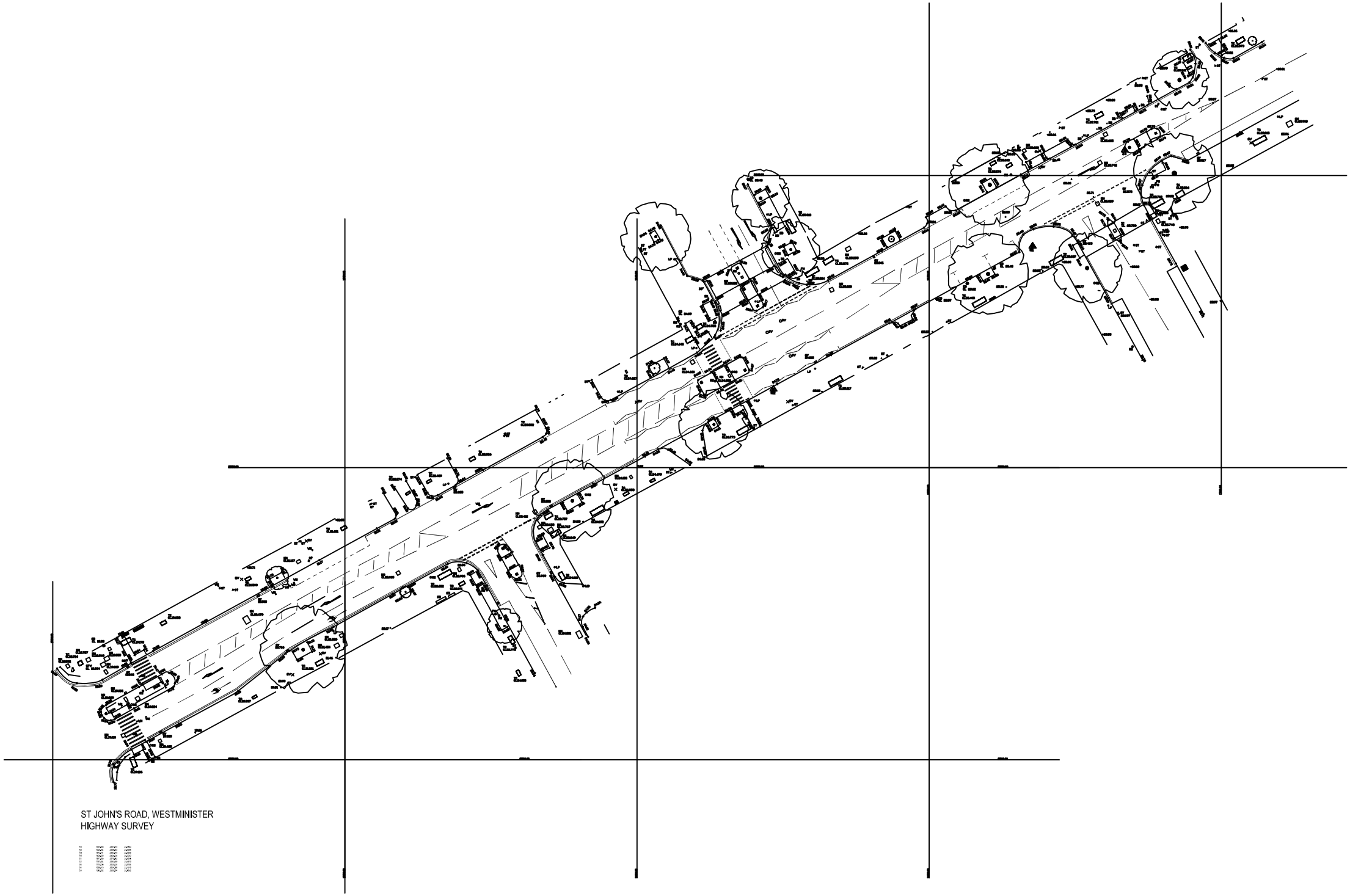

ST JOHN'S ROAD, WESTMINISTER
HIGHWAY SURVEY